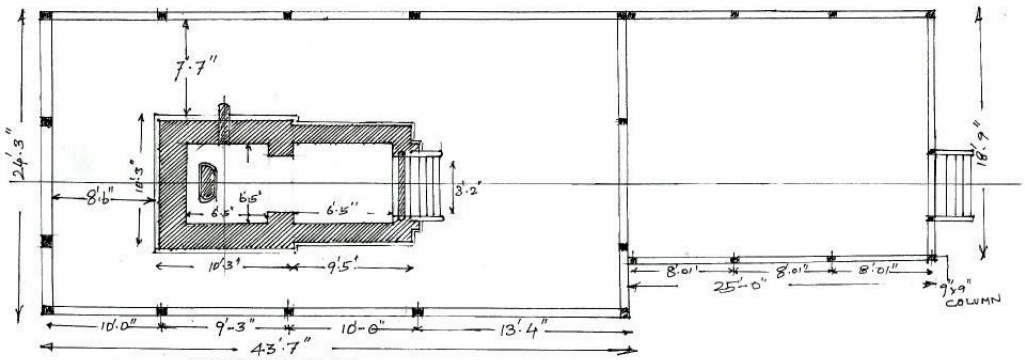

DETAILED PLAN

SRI MATH JATA VINAYAGA TEMPLE

CHITAMBARAM

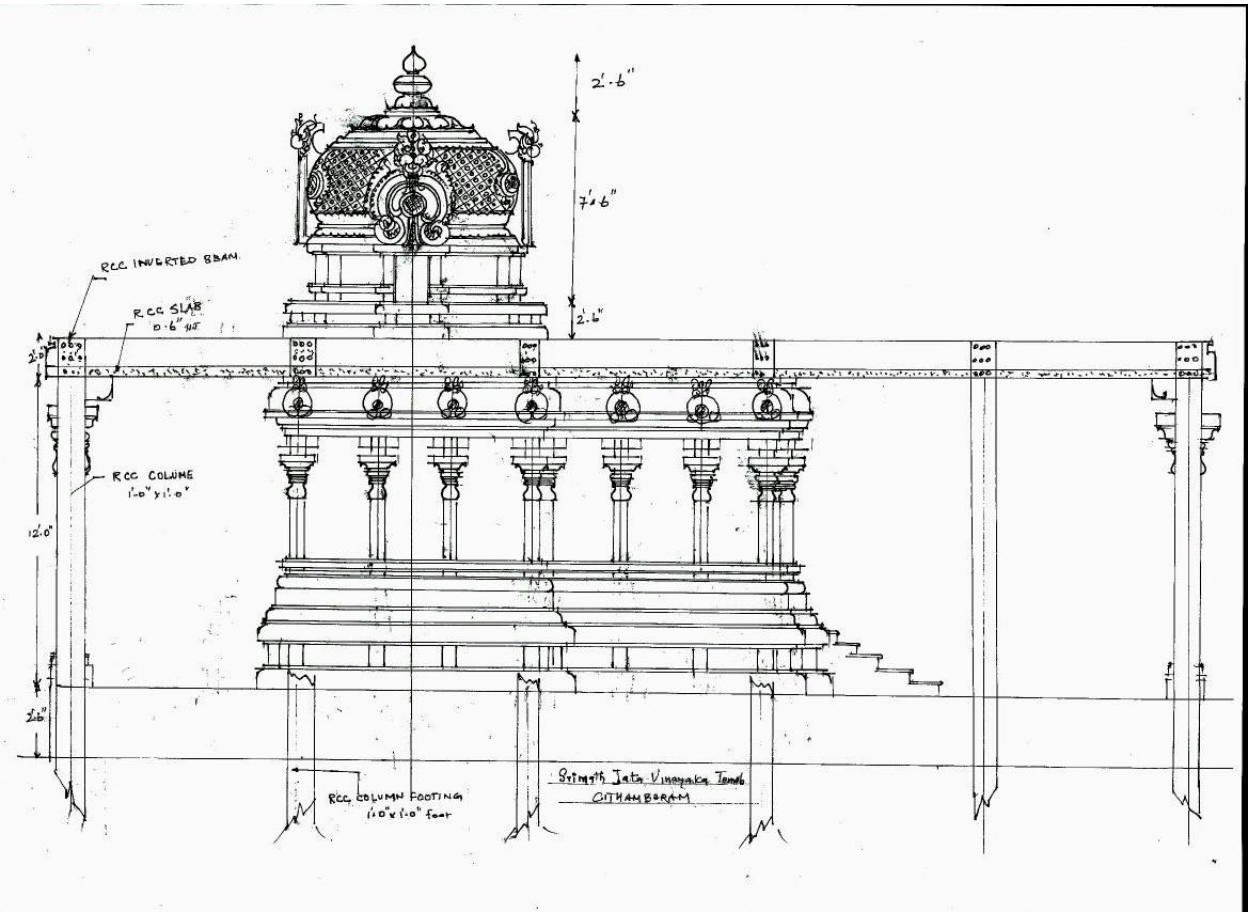
2'-6"
7'-6"
2'-6"
RCC INVERTED BEAM
R.C.C SLAB
0.6" thk
2'-0"
RCC COLUMN
1'-0" x 1'-0"
12'-0"
2'-6"
RCC COLUMN FOOTING
1'-0" x 1'-0" foot
Sri Muthu Jaala Vinayaka Temple
CITHAMBARAM

Sri Madth jada Vinayagar Thunai

Sri Madth jada Vinayagar Temple

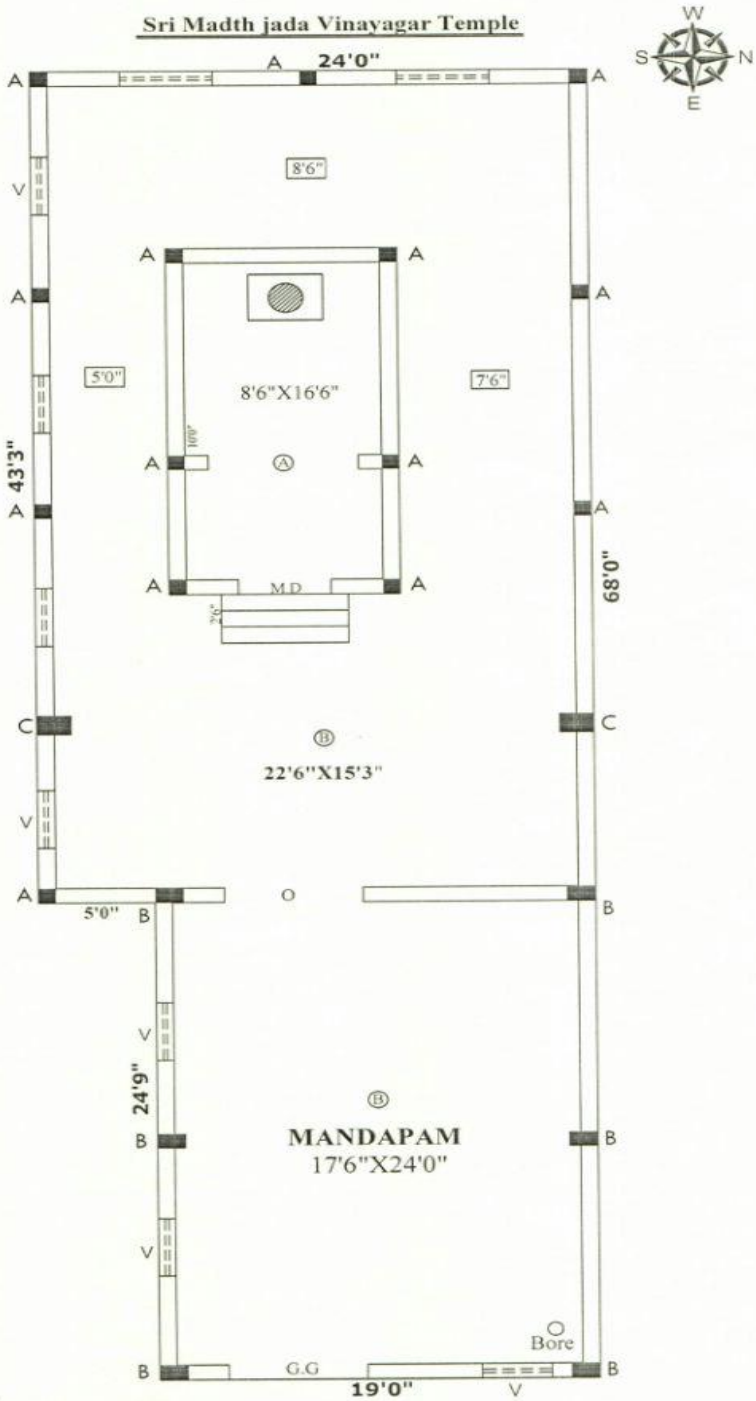

A-Basement Height =4'6"
B-Basement Height =3'0"
Guru Iyer Street, Chidambaram

Mandapam area = 1038 Sqft
Mandapam area = 470 Sqft
Total Built up area = 1508 Sqft

Size of Cloumns
A - 0'9"X0'9" - 14 Nos
B - 1'3"X0'9" - 6 Nos
C - 1'6"X1'0" - 2 Nos

Sri Vinayaga Constructions

Cell-9629323068